Orientalmotor

Servo Motors

AZX Series

Battery-Free Absolute Mechanical Sensor Equipped Motor

Standard Type / **PS** Geared Type 400 W, 600 W

These servo motors are equipped with a battery-free absolute sensor.
They are suitable for positioning applications with a large amount of travel, since they achieve high torque in the high speed range.
The basic operations are the same as the **AZ** Series, making combined use in equipment easy.

EtherCAT EtherNet/IP NEW PROFINET

Battery-Free Absolute Sensor Equipped Servo Motor

The **AZX** Series is equipped with the same battery-free mechanical absolute sensor (ABZO sensor) as the **AZ** Series.
These are dedicated servo motors for positioning and continuous operation.

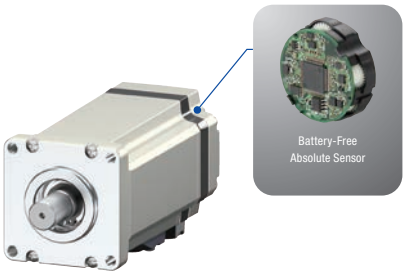

- Mechanical-Type Sensor
  Holds positioning information even when powered off
- Multi-Turn Absolute Sensor
  Absolute position detection is possible with ±900 rotations (1800 rotations) of the motor shaft from the reference home position

●For details about the advantages, please see the Oriental Motor website.

●No External Sensors Required

Thanks to the absolute system, a home sensor or external sensor is not required.

Advantages

- High-Speed Return-to-Home + Improved Return-to-Home Accuracy
- Reduced Cost
- Simple Wiring
- Not Affected by External Sensor Malfunctions

●Battery-Free

No battery is necessary for a mechanical-type sensor.
Positioning information is managed mechanically by the ABZO sensor.

Advantages

- No Battery Replacement Required
- No Battery Installation Space Required (Unlimited driver installation possibilities)
- Safe for Overseas Shipping

Network Compatible Drivers

These drivers are EtherCAT, EtherNet/IP and PROFINET-compatible. The host control device and driver are connected with one communication cable, reducing wiring.

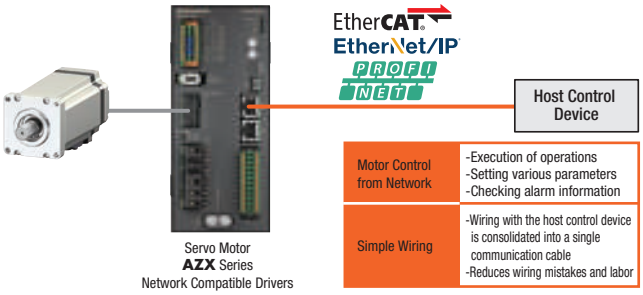

Sequence Function Simplifies Programming*

AZX Series positioning operations come with a variety of sequence functions, such as a timer setting between operations and linked operation, conditional branching, and loop counting. These can be set using the support software **MEXE02**, which helps simplify the host controller's sequence program.

*EtherCAT-compatible drivers are not supported.

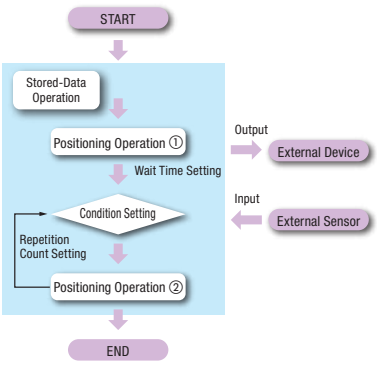

- Positioning Operation Data Setting (Max. 256 points)
- General-Purpose I/O Signal Counts (Input 6, output 6)
- Communication I/O Signal Counts (Input 16, output 16)

Achieves High Torque in the High Speed Range

The **AZX** Series achieves high torque in the high speed range.
It is suitable for positioning applications with a large amount of travel (e.g.: ball screw driving).

Standard Type

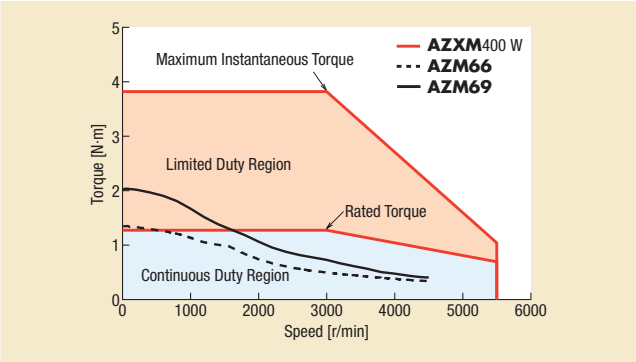

PS Geared Type

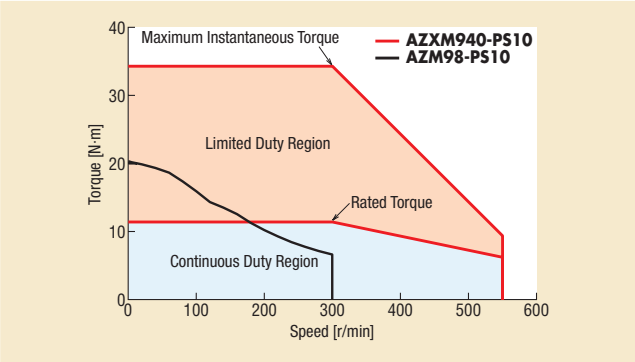

- This is a comparison of the speed – torque characteristics of the **AZX** Series and **AZ** Series.
  The **AZX** Series offers superior torque in the high speed range, the **AZ** Series is better in the low speed range.

The Basic Operations are the Same as the **AZ** Series

Using the **AZX** Series and **AZ** Series together in the same equipment can eliminate the work of operational changes.

AZX Series

Wiring	Signal system wiring
Setting	Switch and parameter functions, setting method (**MEXE02** used)
Control	Parameter ID when controlling over a network
Operation Functions	Built-in positioning operation function, etc. in the driver

Same Operating Method

AZ Series

Product Line

Motors, drivers, and cables must be ordered individually.

Motor			Driver	Cables		
Type	Output Power	Frame Size		Cable Type		Cable Length
Standard Standard Type with Electromagnetic Brake	400 W	60 mm	 EtherCAT EtherNet/IP NEW PROFINET Single-Phase/ Three-Phase 200-240 VAC	Connection Cable Sets	-For Motor / Encoder 	1 to 20 m
	600 W	85 mm			-For Motor / Encoder / Electromagnetic Brake 	
PS Geared **PS** Geared Type with Electromagnetic Brake	400 W	90 mm (Gear Ratio 5, 10, 25)		Flexible Connection Cable Sets	-For Motor / Encoder 	
	600 W	90 mm (Gear Ratio 5) 120 mm (Gear Ratio 10, 25)			-For Motor / Encoder / Electromagnetic Brake 	

- EtherCAT-compatible drivers have passed the official EtherCAT conformance test.
- EtherCAT® is a patented technology licensed from Beckhoff Automation GmbH (Germany) and is a registered trademark of that company.
- EtherNet/IP™ is a trademark of ODVA.
- PROFINET is a trademark or registered trakemark of PROFIBUS Nutzerorganisation e.V. (PNO).

System Configuration

Combination of Standard Type Motor with Electromagnetic Brake and Network Compatible Driver

An example of a configuration using I/O control or EtherNet/IP with an EtherNet/IP compatible driver is shown below.
Motors, drivers, and connection cable sets / flexible connection cable sets must be ordered individually.

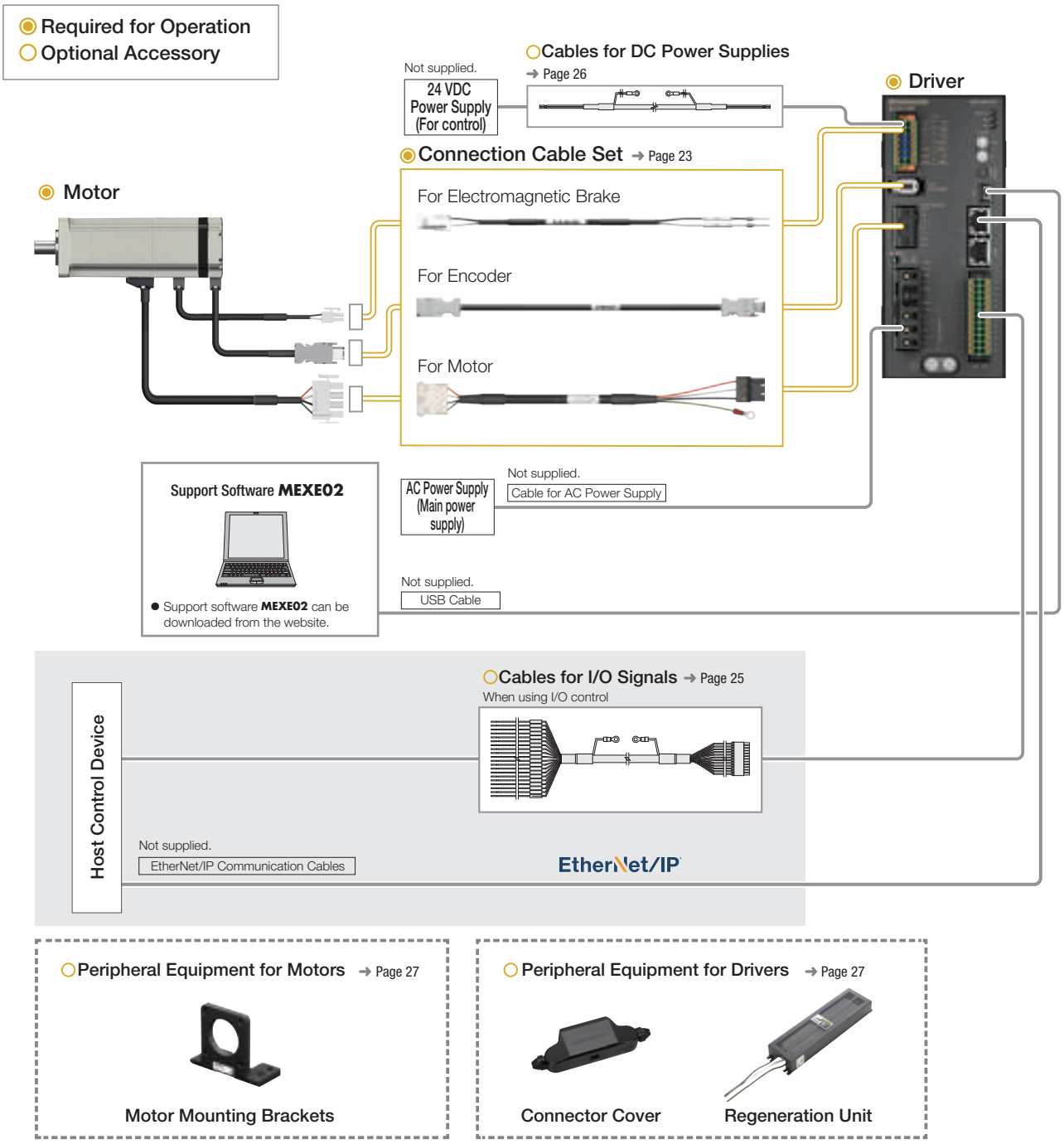

●Example of System Configuration

Motor		Driver		Cables			Peripheral Equipment
				Connection Cable Set (1 m)	Cable for I/O Signals Connector Type (1 m)		Regeneration Unit
AZXM640MC	+	AZXD-SEP	+	CC010VXFB	CC24D010C-1	+	RGB200
◉		◉		◉	○		○

●The system configuration shown above is an example. Other combinations are also available.

Note

●The motor cable and electromagnetic brake cable from the motor cannot be connected directly to the driver. When connecting to a driver, use a connection cable.

Product Number

Motor

◇Standard Type

AZXM 6 40 A C

① ② ③ ④ ⑤

①	Motor Type	**AZXM**: **AZX** Series Motor
②	Motor Frame Size	**6**: 60 mm **9**: 85 mm
③	Output Power	**40**: 400 W **60**: 600 W
④	Output Shaft Type	**A**: Single Shaft **M**: Type with Electromagnetic Brake
⑤	Motor Type	**C**: AC Input Specification

◇**PS** Geared Type

AZXM 9 40 A C-PS 10

① ② ③ ④ ⑤ ⑥ ⑦

①	Motor Type	**AZXM**: **AZX** Series Motor
②	Motor Frame Size	**9**: 90 mm **12**: 120 mm
③	Output Power	**40**: 400 W **60**: 600 W
④	Output Shaft Type	**A**: Single Shaft **M**: Type with Electromagnetic Brake
⑤	Motor Type	**C**: AC Input Specification
⑥	Geared Type	**PS**: **PS** Geared Type
⑦	Gear Ratio	

Driver

AZXD-S EP

① ② ③

①	Driver Type	**AZXD**: **AZX** Series Driver
②	Power Supply Input	**S**: Single-Phase/Three-Phase 200-240 VAC
③	Product Line	**ED**: EtherCAT-Compatible **EP**: EtherNet/IP-Compatible **PN**: PROFINET-Compatible

Connection Cable Sets / Flexible Connection Cable Sets

CC 010 V X F B

① ② ③ ④ ⑤ ⑥

①		**CC**: Cable
②	Length	**010**: 1 m **020**: 2 m **030**: 3 m **050**: 5 m **070**: 7 m **100**: 10 m **150**: 15 m **200**: 20 m
③	Reference Number	
④	Applicable Model	**X**: For **AZX** Series
⑤	Cable Type	**F**: Connection Cable Set **R**: Flexible Connection Cable Set
⑥	Description	Blank: For Type without Electromagnetic Brake **B**: For Type with Electromagnetic Brake

Product Line

Motors, drivers, and connection cables must be ordered individually.

Motor

◇Standard Type

Frame Size	Output Power	Product Name
60 mm	400 W	**AZXM640AC**
85 mm	600 W	**AZXM960AC**

◇Standard Type with an Electromagnetic Brake

Frame Size	Output Power	Product Name
60 mm	400 W	**AZXM640MC**
85 mm	600 W	**AZXM960MC**

◇**PS** Geared Type

Frame Size	Output Power	Product Name
90 mm	400 W	**AZXM940AC-PS5** **AZXM940AC-PS10** **AZXM940AC-PS25**
	600 W	**AZXM960AC-PS5**
NEW 120 mm	600 W	**AZXM1260AC-PS10** **AZXM1260AC-PS25**

◇**PS** Geared Type with Electromagnetic Brake

Frame Size	Output Power	Product Name
90 mm	400 W	**AZXM940MC-PS5** **AZXM940MC-PS10** **AZXM940MC-PS25**
	600 W	**AZXM960MC-PS5**
NEW 120 mm	600 W	**AZXM1260MC-PS10** **AZXM1260MC-PS25**

Driver

◇EtherCAT-Compatible

Power Supply Input	Product Name
Single-Phase/Three-Phase 200-240 VAC	**AZXD-SED**

◇EtherNet/IP-Compatible

Power Supply Input	Product Name
Single-Phase/Three-Phase 200-240 VAC	**AZXD-SEP**

Driver

◇PROFINET-Compatible NEW

Power Supply Input	Product Name
Single-Phase/Three-Phase 200-240 VAC	**AZXD-SPN**

Connection Cable Sets / Flexible Connection Cable Sets

Use the flexible connection cable set in applications where the cable is bent and flexed.
Extension cable sets and flexible extension cable sets are also available.
Refer to page 22.

Included Items

Motor

Type \ Included Items	Parallel Key
Standard Type	-
PS Geared Type	1 piece

Driver

Type \ Included Items	Connector
EtherCAT-Compatible EtherNet/IP-Compatible PROFINET-Compatible	-For CN1 (1 piece) -For CN4 (1 piece) -For CN7 (1 piece) -Connector wiring lever (1 piece)

List of Combinations

Product	Type	Product Name
Motor	Standard Type	**AZXM640■C**, **AZXM960■C**
	PS Geared Type	**AZXM940■C-PS□**, **AZXM960■C-PS5**
		AZXM1260■C-PS□

+

Product	Type	Product Name
Driver	EtherCAT-Compatible	**AZXD-SED**
	EtherNet/IP-Compatible	**AZXD-SEP**
	PROFINET-Compatible	**AZXD-SPN**

+

Product	Type	Product Name
Connection Cable Sets / Flexible Connection Cable Sets	Connection Cable Set	For Motor / Encoder: **CC◇◇◇VXF** For Motor / Encoder / Electromagnetic Brake: **CC◇◇◇VXFB**
	Flexible Connection Cable Sets	For Motor / Encoder: **CC◇◇◇VXR** For Motor / Encoder / Electromagnetic Brake: **CC◇◇◇VXRB**

● A letter or number indicating the following is specified where the box is located in the product name.
■: Output Shaft Shape
□: Gear Ratio
◇: Cable Length

How to Read Specifications

	Motor Product Name		Single Shaft	AZXM640AC	AZXM940AC-PS5
			With Electromagnetic Brake	AZXM640MC	AZXM940MC-PS5
	Driver Product Name			AZXD-S□	
①	Rated Output Power		W	400	400
②	Rated Speed		r/min	3000	-
③	Max. Speed		r/min	5500	-
④	Rated Torque		N·m	1.27	5.72
⑤	Maximum Instantaneous Torque		N·m	3.82	17.1
⑥	Permissible Speed Range		r/min	-	0～1100
⑦	Rotor Inertia		J: kg·m^2	0.294×10^{-4} [0.316×10^{-4}]	0.294×10^{-4} [0.316×10^{-4}]
⑧	Inertia		J: kg·m^2	-	0.163×10^{-4}
⑨	Permissible Load Inertia		J: kg·m^2	14.7×10^{-4}	0.037
⑩	Gear Ratio			-	5
⑪	Resolution		P/R	100～10000 (Factory setting 1000)	500～50000 (Factory setting 5000)
	Detector			Mechanical Multi-Turn Absolute Encoder 1 Turn: 16 bit Multi-Turn: ±900 rotations (1800 rotations)	
⑫	Backlash		arcmin	-	15
⑬	Power Supply Input	Main Power Supply	Input Voltage	Single-Phase/Three-Phase 200-240 VAC -15～+6% 50/60 Hz	
			Rated Current A	Single-Phase: 5.3 Three-Phase: 3.0	
		Control Power Supply	Input Voltage	24 VDC±5%	
			Input Current A	0.27 [0.57]	
	Electromagnetic Brake		Type	Power Off Activated Type	
			Power Supply Input	24 VDC±10%	
			Power Consumption W	7.2	
			Rated Current A	0.3	
⑭			Static Friction Torque N·m	1.27	

①Rated Output Power
This is the permissible range the temperature rise may not exceed when continuously operated at the motor's rated speed and rated torque.

②Rated Speed
This is the rotation speed when the motor is operated at rated output power.

③Max. Speed
This is the maximum rotation speed the motor can turn at.

④Rated Torque
This is the output torque when the motor is operated at rated output power and rated speed.

⑤Maximum Instantaneous Torque
This is the maximum torque that can be used instantaneously (in a short period of time).
It is the maximum for acceleration and deceleration, and up to this torque can be used.

⑥Permissible Speed Range
This is the range of the operable rotation speed on the output gear shaft.

⑦Rotor Inertia
This refers to the inertia of the rotor inside the motor.
This is necessary when the required torque (acceleration torque) for the motor is calculated.

⑧Inertia
This is the inertia in the gearhead.
This is necessary when the required torque (acceleration torque) for the motor is calculated.

⑨Permissible Load Inertia
This is the load inertia that the motor can stably control.
Control can become unstable if a load exceeding this value is applied, resulting in speed regulation variation and issues with protection circuit operation, vibration, etc.

⑩Gear Ratio
This is the ratio of the rotation speed between the input speed from the motor and the speed of the output gear shaft. For example, a gear ratio of 10 indicates that when the input speed from the motor is 10 r/min, the output gear shaft speed is 1 r/min.

⑪Resolution
This indicates the angle of rotation of the output shaft in one pulse. For example, if the resolution = 1000 p/rev, one rotation of the motor (360°) can be divided into 1000.

⑫Backlash
This is the play of the output gear shaft when the motor shaft is fixed.
When positioning in bi-direction, the positioning accuracy is affected.

⑬Rated Current
This is the input current of the main power supply required for use in the continuous duty region.

⑭Static Friction Torque
This is the electromagnetic brake specifications. It is the maximum holding torque (holding force) at which the electromagnetic brake can hold position.

How to Read Speed – Torque Characteristics

AZXM640□C

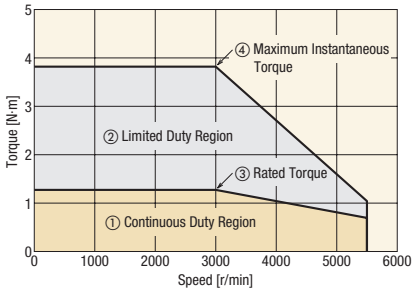

①Continuous Duty Region
This is the region that can be used at continuous rating. The effective load torque must be corrected to this region.

②Limited Duty Region
This is the region used for acceleration and deceleration.

③Rated Torque
This is the output torque when the motor is operated at rated output power and rated speed.

AZXM940□C-PS5

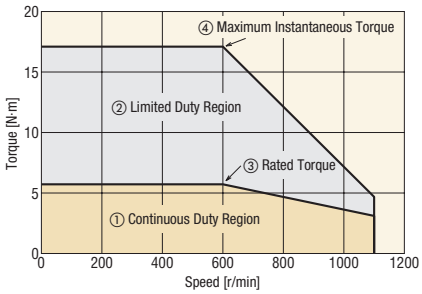

④Maximum Instantaneous Torque
This is the maximum torque that can be used instantaneously (in a short period of time).
It is the maximum for acceleration and deceleration, and up to this torque can be used.

Standard Type

Frame Size 60 mm

Specifications

Motor Product Name		Single Shaft		**AZXM640AC**
		With Electromagnetic Brake		**AZXM640MC**
Driver Product Name				**AZXD-S■**
Rated Output Power			W	400
Rated Speed			r/min	3000
Max. Speed			r/min	5500
Rated Torque			N·m	1.27
Maximum Instantaneous Torque			N·m	3.82
Rotor Inertia			J: kg·m^2	0.294×10^{-4} [0.316×10^{-4}]*1
Permissible Inertia*2			J: kg·m^2	14.7×10^{-4}
Resolution			P/R	100～10000 (Factory setting 1000)
Detector				Mechanical Multi-Turn Absolute Encoder 1 Turn: 16 bit Multi-Turn: ±900 rotations (1800 rotations)
Power Supply Input	Main Power Supply	Input Voltage		Single-Phase/Three-Phase 200-240 VAC −15～+6% 50/60 Hz
		Rated Current*3	A	Single-Phase: 5.3 Three-Phase: 3.0
	Control Power Supply	Input Voltage		24 VDC±5%
		Input Current	A	0.27 [0.57]*1
Electromagnetic Brake*4		Type		Power Off Activated Type
		Power Supply Input		24 VDC±10%
		Power Consumption	W	7.2
		Rated Current	A	0.3
		Static Friction Torque	N·m	1.27

● A letter indicating the driver type is specified where the box ■ is located in the product name. Check "■ List of Combinations" on page 6 for driver product names.

*1 The value inside the [ ] represents the value when connecting an electromagnetic brake motor.

*2 50 times the rotor inertia.

*3 The value when operated in the continuous duty region. When operated in the limited duty region, a maximum of approximately 3 times the current flows.

*4 The electromagnetic brake holds position when the power is off. It cannot be used for braking applications.

Note

● When the motor is continuously operated at rating, a heat sink of a capacity at least equivalent to an aluminum plate of the following size is required.
AZXM640□C: 300 mm×300 mm, 10 mm thick

Speed – Torque Characteristics

AZXM640□C

Power supply specification: Three-phase/single-phase 200-240 VAC

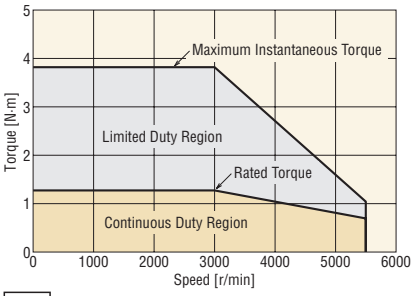

Note

● A regeneration unit may be needed depending on the operating conditions. Regeneration units ➜ Page 27

● Either **A** (standard) or **M** (type with an electromagnetic brake) indicating the configuration is specified where the box □ is located in the product name.

Standard Type

Frame Size 85 mm

Specifications

Motor Product Name	Single Shaft		**AZXM960AC**
	With Electromagnetic Brake		**AZXM960MC**
Driver Product Name			**AZXD-S■**
Rated Output Power		W	600
Rated Speed		r/min	3000
Max. Speed		r/min	5500
Rated Torque		N·m	1.91
Maximum Instantaneous Torque	Single-Phase 200-240 VAC	N·m	3.82
	Three-Phase 200-240 VAC	N·m	7.16
Rotor Inertia		J: kg·m^2	0.948×10^{-4} [1.03×10^{-4}]*1
Permissible Inertia*2		J: kg·m^2	47.4×10^{-4}
Resolution		P/R	100～10000 (Factory setting 1000)
Detector			Mechanical Multi-Turn Absolute Encoder 1 Turn: 16 bit Multi-Turn: ±900 rotations (1800 rotations)
Power Supply Input	Main Power Supply: Input Voltage		Single-Phase/Three-Phase 200-240 VAC −15～+6% 50/60 Hz
	Main Power Supply: Rated Current*3	A	Single-Phase: 7.1 Three-Phase: 3.9
	Control Power Supply: Input Voltage		24 VDC±5%
	Control Power Supply: Input Current	A	0.27 [0.62]*1
Electromagnetic Brake*4	Type		Power Off Activated Type
	Power Supply Input		24 VDC±10%
	Power Consumption	W	8.5
	Rated Current	A	0.35
	Static Friction Torque	N·m	1.91

●A letter indicating the driver type is specified where the box ■ is located in the product name. Check "■List of Combinations" on page 6 for driver product names.

*1 The value inside the [ ] represents the value when connecting an electromagnetic brake motor.

*2 50 times the rotor inertia.

*3 The value when operated in the continuous duty region. When operated in the limited duty region, a maximum of approximately 4 times the current flows for three-phase input, and a maximum of approximately 2 times the current flows for single-phase input.

*4 The electromagnetic brake holds position when the power is off. It cannot be used for braking applications.

Note

●When the motor is continuously operated at rating, a heat sink of a capacity at least equivalent to an aluminum plate of the following size is required.
AZXM960□C: 350 mm×350 mm, 10 mm thick

Speed – Torque Characteristics

AZXM960□C

Power supply specification: Three-phase 200-240 VAC

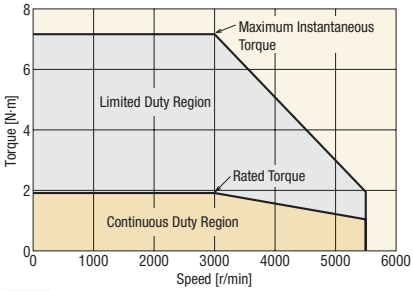

AZXM960□C

Power supply specification: Single-phase 200-240 VAC

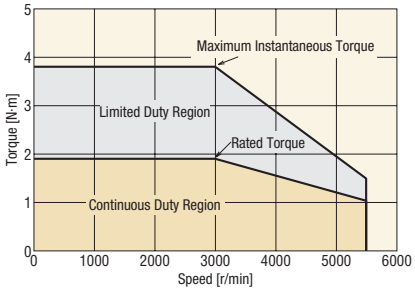

Note

●A regeneration unit may be needed depending on the operating conditions. Regeneration units ➜ Page 27

●Either **A** (standard) or **M** (type with an electromagnetic brake) indicating the configuration is specified where the box □ is located in the product name.

PS Geared Type

Frame Size 90 mm

Specifications

Motor Product Name	Single Shaft	AZXM940AC-PS5	AZXM940AC-PS10	AZXM940AC-PS25	AZXM960AC-PS5
	With Electromagnetic Brake	AZXM940MC-PS5	AZXM940MC-PS10	AZXM940MC-PS25	AZXM960MC-PS5
Driver Product Name		AZXD-S□			
Rated Output Power	W	400			600
Rated Torque	N·m	5.72	11.4	25.7	8.6
Maximum Instantaneous Torque	Single-Phase 200-240 VAC N·m	17.1	34.3	77.2	17.2
	Three-Phase 200-240 VAC N·m				32.2
Permissible Speed Range	r/min	0～1100	0～550	0～220	0～1100
Rotor Inertia	J: kg·m^2	0.294×10^{-4} [0.316×10^{-4}] *1			0.948×10^{-4} [1.03×10^{-4}] *1
Inertia*2	J: kg·m^2	0.163×10^{-4}	0.160×10^{-4}	0.175×10^{-4}	0.163×10^{-4}
Permissible Inertia*3	J: kg·m^2	0.037	0.147	0.919	0.119
Gear Ratio		5	10	25	5
Resolution	P/R	500～50000 (Factory setting 5000)	1000～100000 (Factory setting 10000)	2500～250000 (Factory setting 25000)	500～50000 (Factory setting 5000)
Detector		Mechanical Multi-Turn Absolute Encoder 1 Turn: 16 bit Multi-Turn: ±900 rotations (1800 rotations)			
Backlash	arcmin	15 (0.25°)			
Power Supply Input: Main Power Supply	Input Voltage	Single-Phase/Three-Phase 200-240 VAC −15～+6% 50/60 Hz			
	Rated Current*4 A	Single-Phase: 5.3 Three-Phase: 3.0			Single-Phase: 7.1 Three-Phase: 3.9
Power Supply Input: Control Power Supply	Input Voltage	24 VDC±5%			
	Input Current A	0.27 [0.57]*1			0.27 [0.62]*1
Electromagnetic Brake*5	Type	Power Off Activated Type			
	Power Supply Input	24 VDC±10%			
	Power Consumption W	7.2			8.5
	Rated Current A	0.3			0.35
	Static Friction Torque N·m	1.27			1.91

●A letter indicating the driver type is specified where the box ■ is located in the product name. Check "■List of Combinations" on page 6 for driver product names.

*1 The value inside the [ ] represents the value when connecting an electromagnetic brake motor.
*2 This is the value of the internal inertia of the gear converted to the motor shaft.
*3 The square of 50 times the rotor inertia × the gear ratio.
*4 The value when operated in the continuous duty region (the region that can be used at continuous rating).
When operated in the limited duty region (the region used for acceleration and deceleration), the following current flows.
·**AZXM940**: Approx. 3 times max.
·**AZXM960** single-phase: Approx. 2 times max.
·**AZXM960** three-phase: Approx. 4 times max.
*5 The electromagnetic brake maintains its position when power is disconnected, but it cannot be used as an active braking mechanism.

Speed – Torque Characteristics

AZXM940□C-PS5

Power supply specification: Three-phase/single-phase 200-240 VAC

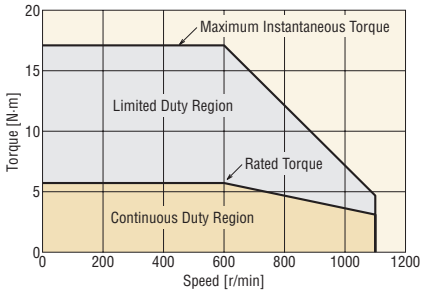

AZXM940□C-PS10

Power supply specification: Three-phase/single-phase 200-240 VAC

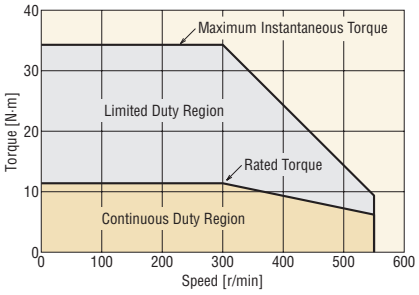

AZXM940□C-PS25

Power supply specification: Three-phase/single-phase 200-240 VAC

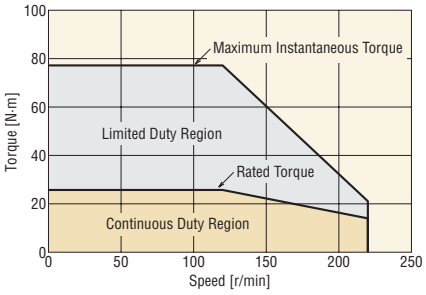

AZXM960□C-PS5

Power supply specification: Three-phase 200-240 VAC

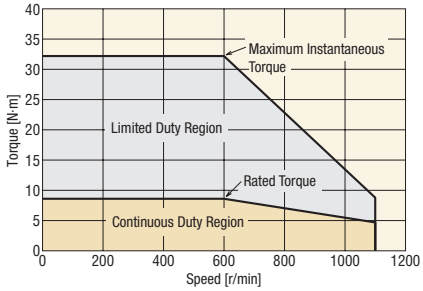

AZXM960□C-PS5

Power supply specification: Single-phase 200-240 VAC

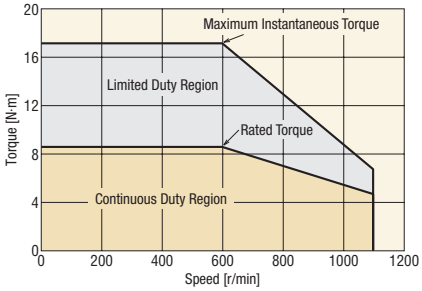

Note

●A regeneration unit may be needed depending on the operating conditions. Regeneration units ➜ Page 27

●Either **A** (standard) or **M** (type with an electromagnetic brake) indicating the configuration is specified where the box □ is located in the product name.

PS Geared Type

Frame Size 120 mm

Specifications

Motor Product Name		Single Shaft	**AZXM1260AC-PS10**	**AZXM1260AC-PS25**
		With Electromagnetic Brake	**AZXM1260MC-PS10**	**AZXM1260MC-PS25**
Driver Product Name			**AZXD-S□**	
Rated Output Power		W	600	
Rated Torque		N·m	18.1	43.1
Maximum Instantaneous Torque		Single-Phase 200-240 VAC N·m	36.3	86.2
		Three-Phase 200-240 VAC N·m	68	162
Permissible Speed Range		r/min	0～550	0～220
Rotor Inertia		J: kg·m^2	0.948×10^{-4} [1.03×10^{-4}] ✻1	
Inertia✻2		J: kg·m^2	0.188×10^{-4}	0.175×10^{-4}
Permissible Inertia✻3		J: kg·m^2	0.474	2.963
Gear Ratio			10	25
Resolution		P/R	1000～100000 (Factory setting 10000)	2500～250000 (Factory setting 25000)
Detector			Mechanical Multi-Turn Absolute Encoder 1 Turn: 16 bit Multi-Turn: ±900 rotations (1800 rotations)	
Backlash		arcmin	15 (0.25°)	
Power Supply Input	Main Power Supply	Input Voltage	Single-Phase/Three-Phase 200-240 VAC −15～+6% 50/60 Hz	
		Rated Current✻4 A	Single-Phase: 7.1 Three-Phase: 3.9	
	Control Power Supply	Input Voltage	24 VDC±5%	
		Input Current A	0.27 [0.62]✻1	
Electromagnetic Brake✻5		Type	Power Off Activated Type	
		Power Supply Input	24 VDC±10%	
		Power Consumption W	8.5	
		Rated Current A	0.35	
		Static Friction Torque N·m	1.91	

●A letter indicating the driver type is specified where the box ■ is located in the product name. Please check "■ List of Combinations" on page 6 for driver product names.

✻1 The value inside the [ ] represents the value when connecting an electromagnetic brake motor.

✻2 This is the value of the internal inertia of the gear converted to the motor shaft.

✻3 The square of 50 times the rotor inertia × the gear ratio.

✻4 The value when operated in the continuous duty region (the region that can be used at continuous rating).
When operated in the limited duty region (the region used for acceleration and deceleration), the following current flows.
·**AZXM1260** single-phase: Approx. 2 times max.
·**AZXM1260** three-phase: Approx. 4 times max.

✻5 The electromagnetic brake maintains its position when power is disconnected, but it cannot be used as an active braking mechanism.

Speed – Torque Characteristics

AZXM1260□C-PS10

Power supply specification: Three-phase 200-240 VAC

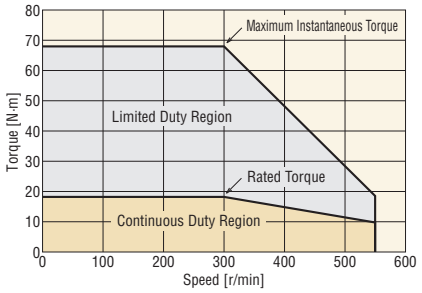

AZXM1260□C-PS10

Power supply specification: Single-phase 200-240 VAC

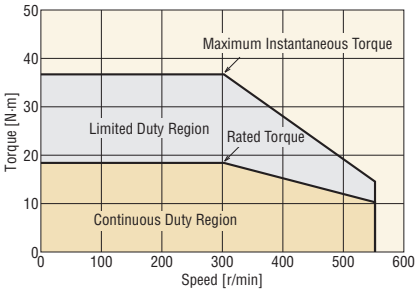

AZXM1260□C-PS25

Power supply specification: Three-phase 200-240 VAC

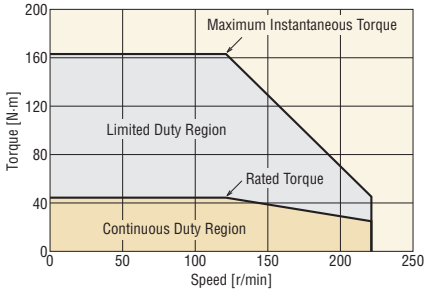

AZXM1260□C-PS25

Power supply specification: Single-phase 200-240 VAC

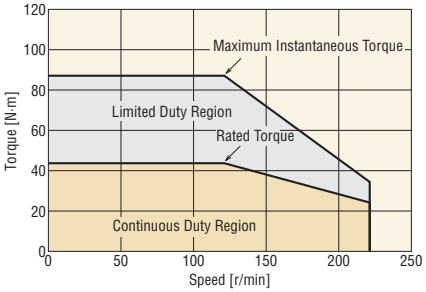

Note

●A regeneration unit may be needed depending on the operating conditions. Regeneration units ➜ Page 27

●Either **A** (standard) or **M** (type with an electromagnetic brake) indicating the configuration is specified where the box □ is located in the product name.

Driver Specifications

Driver Product Name		AZXD-SED	AZXD-SEP	AZXD-SPN
Interface	Control Input	6 Points, Photocoupler		
	Pulse Output	2 Points, Line Driver		
	Control Output	6 Points, Photocoupler and Open-Collector		
	Power Shut Down Signal Input	2 Points, Photocoupler		
	Power Shut Down Monitor Output	1 Point, Photocoupler and Open-Collector		
	Field Network	EtherCAT	EtherNet/IP	PROFINET

Driver Functions

EtherCAT-Compatible

Driver Product Name		AZXD-SED
Remote I/O	Input	16 Points
	Output	16 Points
Operation Modes		Profile Position Mode (PP)
		Profile Speed Mode (PV)
		Return-to-Home Mode (HM)
		Cyclic Synchronous Position Mode (CSP)
		Cyclic Synchronous Speed Mode (CSV)
Setting Tool		Support Software **MEXE02**
Coordinates Management Method		Battery-Free Absolute System
Monitor and Information		As shown in the table below.
Alarm		○

EtherNet/IP and PROFINET-Compatible

Driver Product Name				AZXD-SEP AZXD-SPN
Number of Positioning Data Sets				256 Points
Remote I/O	Input			16 Points
	Output			16 Points
Setting Tool				Support Software **MEXE02**
Coordinates Management Method				Battery-Free Absolute System
Operation	Positioning Operation	Linked Operation	Independent Operation	○
			Sequential Operation	○
			Multi-Speed Operation (Continuous Sequential Operation)	○
		Sequence Control	Loop Operation (Repeating)	○
			Event Jump Operation	○
	Continuous Operation			○
	Return-To-Home Operation		Return-To-Home Operation	○
			High-Speed Return-to-Home Operation	○
	JOG Operation			○
Monitor and Information			Waveform Monitoring	○
			Overload Detection	○
			Overheat Detection (Motor and driver)	○
			Position and Speed Information	○
			Temperature Detection (Motor and driver)	○
			Motor Load Factor	○
			Distance Traveled / Integrating Distance Traveled	○
Alarm				○

Communication Specifications

EtherCAT

Communication Protocol	IEC 61158 Type12
Physical Layer/Protocol	100 BASE-TX (IEEE 802.3)
Baud Rate	100 Mbps
Communication Cycle	-Free Run Mode: 1 ms min. -SM2 Event Synchronous Mode: 1 ms min. -DC Mode: 0.25 ms, 0.5 ms, 1 ms, 2 ms, 3 ms, 4 ms, 5 ms, 6 ms, 7 ms, 8 ms, 9 ms, 10 ms
Communication Port/Connector	RJ45×2 (Shield-compatible) ECAT IN: EtherCAT Input ECAT OUT: EtherCAT Output
Topology	Daisy Chain (Max. 65,535 nodes)
Process Data	Variable PDO Mapping
Sync Manager	-SM0: Mailbox Output -SM1: Mailbox Input -SM2: Process Data Output -SM3: Process Data Input
Mailbox (CoE)	-Emergency Messages -SDO Request -SDO Response -SDO Information
Synchronous Mode	-Free Run Mode (Asynchronous)) -SM2 Event Synchronous Mode -DC Mode (SYNC0 Event Synchronous)
Device Profile	IEC 61800-7 CiA402 Drive Profile

EtherNet/IP

Communication Protocol		EtherNet/IP (Complies with CT18)
Vendor ID		187: Oriental Motor Co., Ltd
Device Type		43: Generic Device
Baud Rate		10/100 Mbps (Autonegotiation)
Communication Mode		Full Duplex/Half Duplex (Autonegotiation)
Cable Specifications		Shielded Twisted-Pair (STP) Cable Stroke/Cross, Category 5e min. Recommended
Bytes	Output (Scanner→Driver)	40 bytes
	Input (Driver→Scanner)	56 bytes
Implicit Communication	Compatible Connections	2
	Connection Type	Exclusive Owner, Input Only
	Communication Cycle (RPI)	1～3200 ms
	Connection Type (Scanner→Driver)	Point－to－Point
	Connection Type (Driver→Scanner)	Point－to－Point, Multicast
	Data Reflection Trigger	Cyclic
IP Address Setting Method		IP Address Setting Switch, Parameter, DHCP
Compatible Topologies		Star, Linear, Ring (Device Level Ring)

PROFINET

Communication Protocol		PROFINET IO Ver.2.43
Vendor ID		0x33E: ORIENTAL MOTOR
Baud Rate		100 Mbps (Autonegotiation)
Communication Mode		Full Duplex (Autonegotiation)
Cable Specifications		Shielded Twisted-Pair (STP) Cable Stroke/Cross, Category 5e min. Recommended
Communication Connector		RJ45×2 (Shield-compatible)
Conformance Class		B
RT/IRT		RT
NetLoad Class		I
Supported Protocols		DCP, LLDP, SNMP, MRP
Bytes	Output (Host System→driver)	40 byte
	Input (Driver→host system)	56 byte
Compatible Topologies		Star, Tree, Line, Ring

General Specifications

		Motor	Driver
Thermal Class		130 (B)	–
Insulation Resistance		100 MΩ or more when a 500 VDC megger is applied between the following places: -Case–Motor Winding -Case–Electromagnetic Brake Winding*1	100 MΩ or more when a 500 VDC megger is applied between the following places: -Protective Earth Terminal–Main Power Supply Terminal -Encoder Connector–Main Power Supply Terminal -I/O Signal Terminal–Main Power Supply Terminal
Dielectric Strength		Sufficient to withstand the following for 1 minute: -Case–Motor Winding 1.5 kVAC 50 Hz or 60 Hz -Case–Electromagnetic Brake Winding*1 1.0 kVAC 50 Hz or 60 Hz	Sufficient to withstand the following for 1 minute: -Protective Earth Terminal–Main Power Supply Terminal 1.5 kVAC 50 Hz or 60 Hz -Encoder Connector–Main Power Supply Terminal 1.8 kVAC 50 Hz or 60 Hz -I/O Signal Terminal–Main Power Supply Terminal 1.8 kVAC 50 Hz or 60 Hz
Operating Environment (In operation)	Ambient Temperature	0～+40°C (Non-freezing)*2	0～+55°C (Non-freezing)*3 [If the **AZXM960** is used at single-phase 200-240 VAC, then 0～+50°C]*3
	Ambient Humidity	85% or less (Non-condensing)	
	Atmosphere	No corrosive gases or dust. The product should not be exposed to water, oil or other liquids.	
Degree of Protection		IP65 (excluding installation surfaces and connectors)	IP10
Shaft Runout		0.05T.I.R. (mm)*4	–
Concentricity of Installation Pilot to the Shaft		0.075T.I.R. (mm)*4	–
Perpendicularity of Installation Surface to the Shaft		0.075T.I.R. (mm)*4	–

*1 Only for products with an electromagnetic brake
*2 Based on Oriental Motor's internal measurement conditions
*3 When a heat sink of a capacity at least equivalent to an aluminum plate with a size of 200×200 mm and 2 mm thickness
*4 T.I.R. (Total Indicator Reading): The total dial gauge reading when the measurement section is rotated once around the reference axis center.

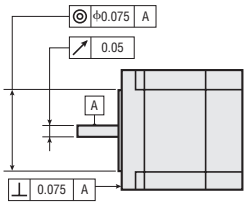

Note

- Separate the motor and driver when measuring insulation resistance or performing a dielectric voltage withstand test. Also, do not perform these tests on the absolute sensor part of the motor.

Permissible Radial Load and Permissible Axial Load

Unit: N

Type	Motor Frame Size	Product Name	Gear Ratio	Permissible Radial Load Distance from Shaft End mm 0	5	10	15	20	Permissible Axial Load
Standard Type	60 mm	**AZXM640**	-	230	245	262	281	304	98
	85 mm	**AZXM960**	-	376	392	408	426	446	147
PS Geared Type	90 mm	**AZXM940**	**5**	380	420	470	540	630	600
			10	480	530	590	680	790	
			25	650	720	810	920	1070	
		AZXM960	**5**	380	420	470	540	630	600
	120 mm	**AZXM1260**	**10**	970	1040	1130	1230	1350	1200
			25	1320	1420	1530	1670	1830	

- The product names are listed such that the product names are distinguishable.
- When the **PS** geared type with an input speed of 3000 r/min operates with either a radial load or axial load, a lifetime of 10000 hours is the permissible value.
  For the life of gearhead, please contact the nearest Oriental Motor sales office, or visit the Oriental Motor website.

Radial Load and Axial Load

Distance from Shaft End [mm]

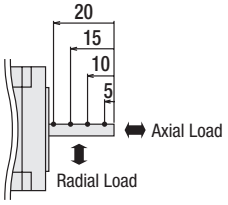

Rotation Direction

This indicates the rotation direction when viewed from the output shaft side of the motor.
Please check the following table for the rotation direction of the output gear shaft when viewed from the output shaft side of the standard type motor.

Type	Gear Ratio	When Viewed from the Output Shaft Side of the Motor Rotation Direction
PS Geared Type	Total Gear Ratio	Same Direction

- Standard Type Motor

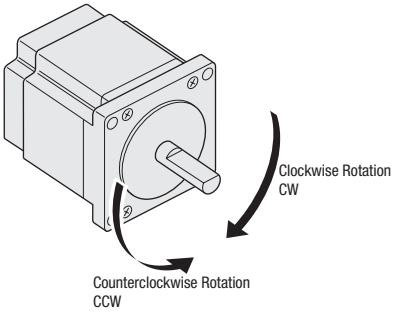

Dimensions (Unit = mm)

Motor

◇Standard Type

Frame Size 60 mm 400 W

2D & 3D CAD

Product Name	L	Mass kg	2D CAD
AZXM640AC	121.5	1.5	C261

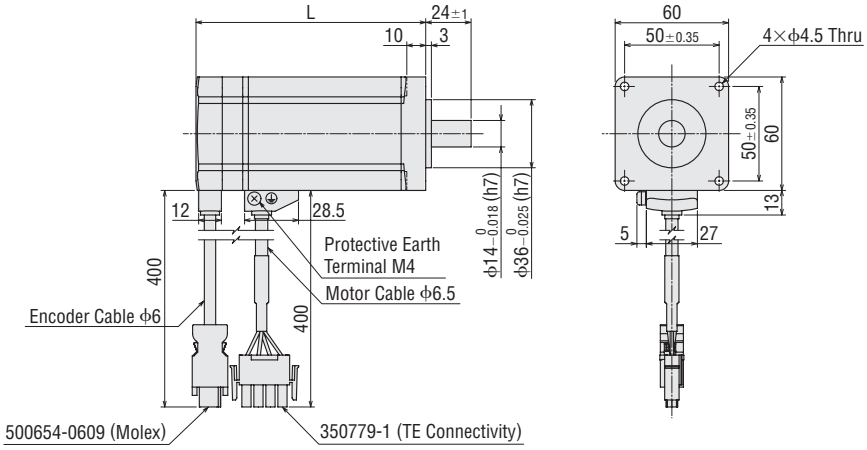

Frame Size 85 mm 600 W

2D & 3D CAD

Product Name	L	Mass kg	2D CAD
AZXM960AC	132	3.1	C267

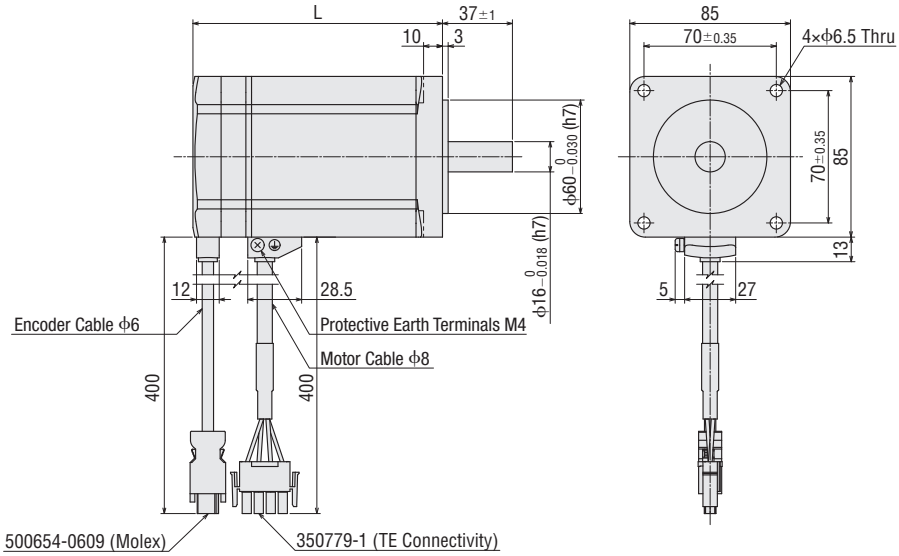

◇Standard Type with an Electromagnetic Brake

Frame Size 60 mm 400 W

2D & 3D CAD

Product Name	L	Mass kg	2D CAD
AZXM640MC	163.5	2.0	C262

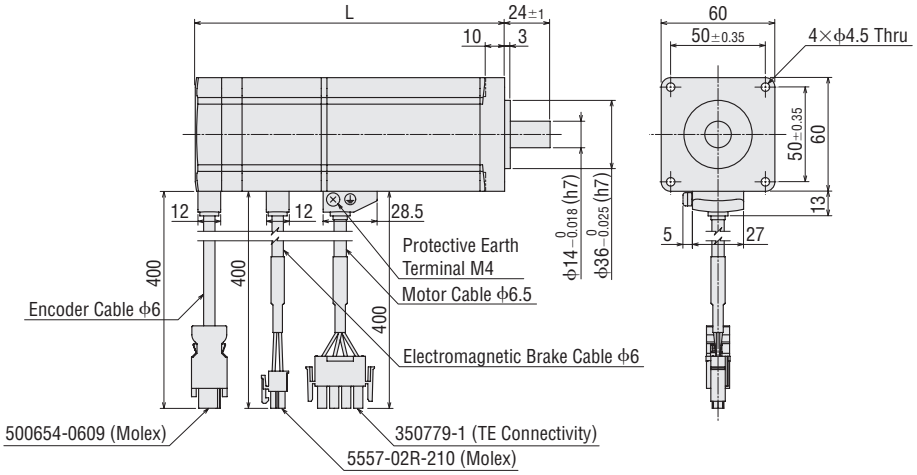

Frame Size 85 mm 600 W

2D & 3D CAD

Product Name	L	Mass kg	2D CAD
AZXM960MC	174	4.0	C268

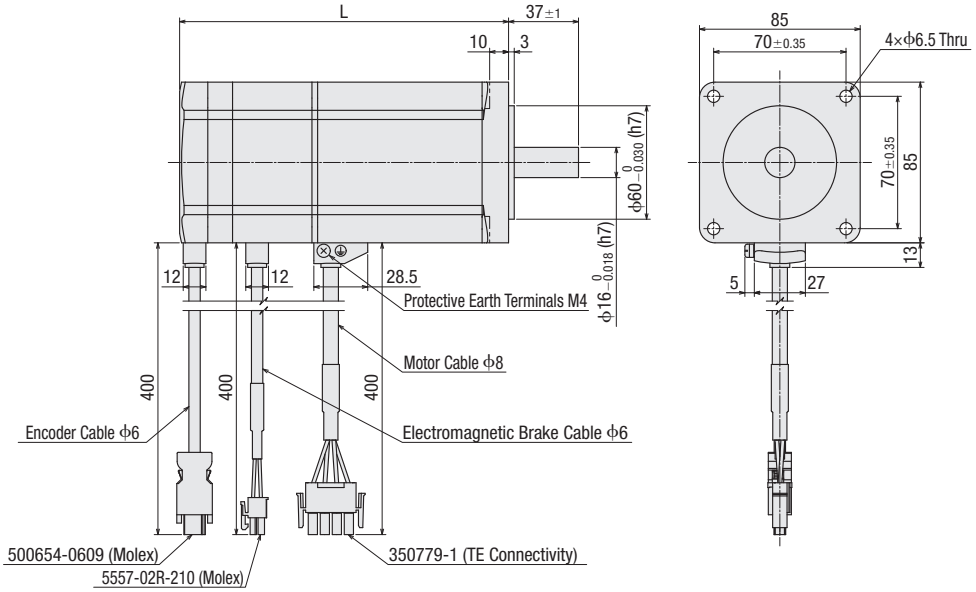

◇**PS** Geared Type

Frame Size 90 mm 400 W

2D & 3D CAD

Product Name	Gear Ratio	L1	L2	Mass kg	2D CAD
AZXM940AC-PS■	**5**, **10**	61	201.5	3.5	C263
	25	88.3	229	4.4	C264

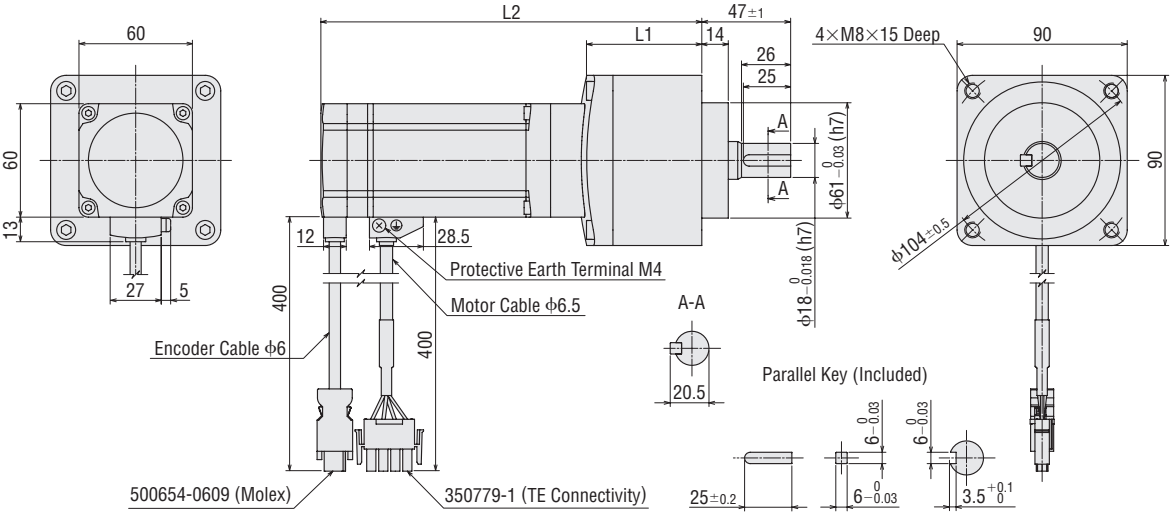

Frame Size 90 mm 600 W

2D & 3D CAD

Product Name	Gear Ratio	L1	L2	Mass kg	2D CAD
AZXM960AC-PS■	**5**	61	226	5.3	C269

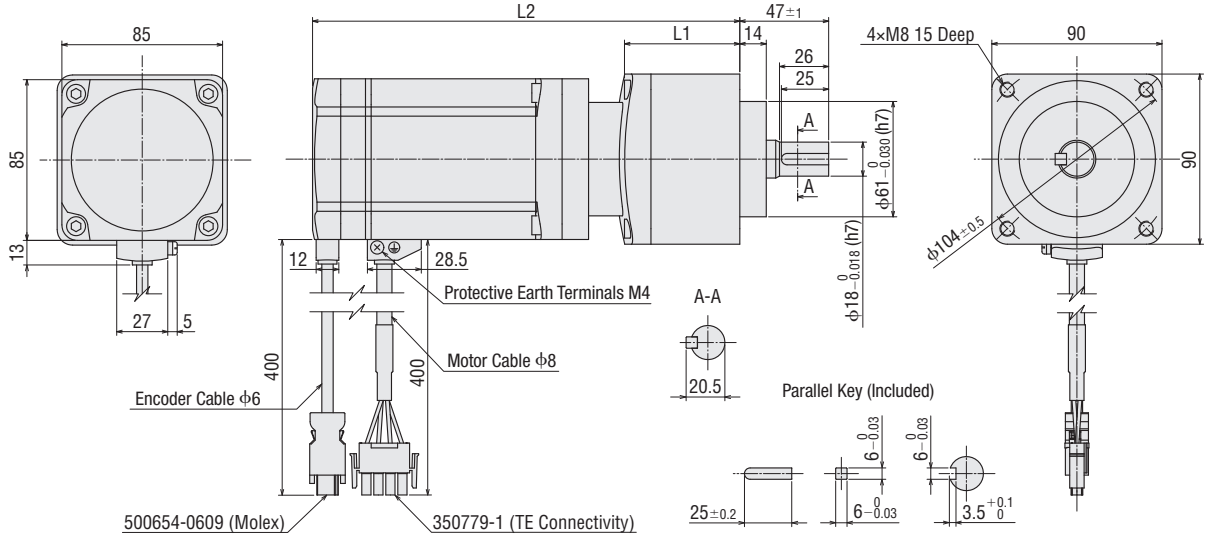

● A number indicating the gear ratio is specified where the box ■ is located in the product name.

Frame Size 120 mm 600 W

2D & 3D CAD

Product Name	Gear Ratio	L1	L2	Mass kg	2D CAD
AZXM1260AC-PS■	**10**	84.6	249.5	7.4	C271
	25	111.9	277	8.2	C274

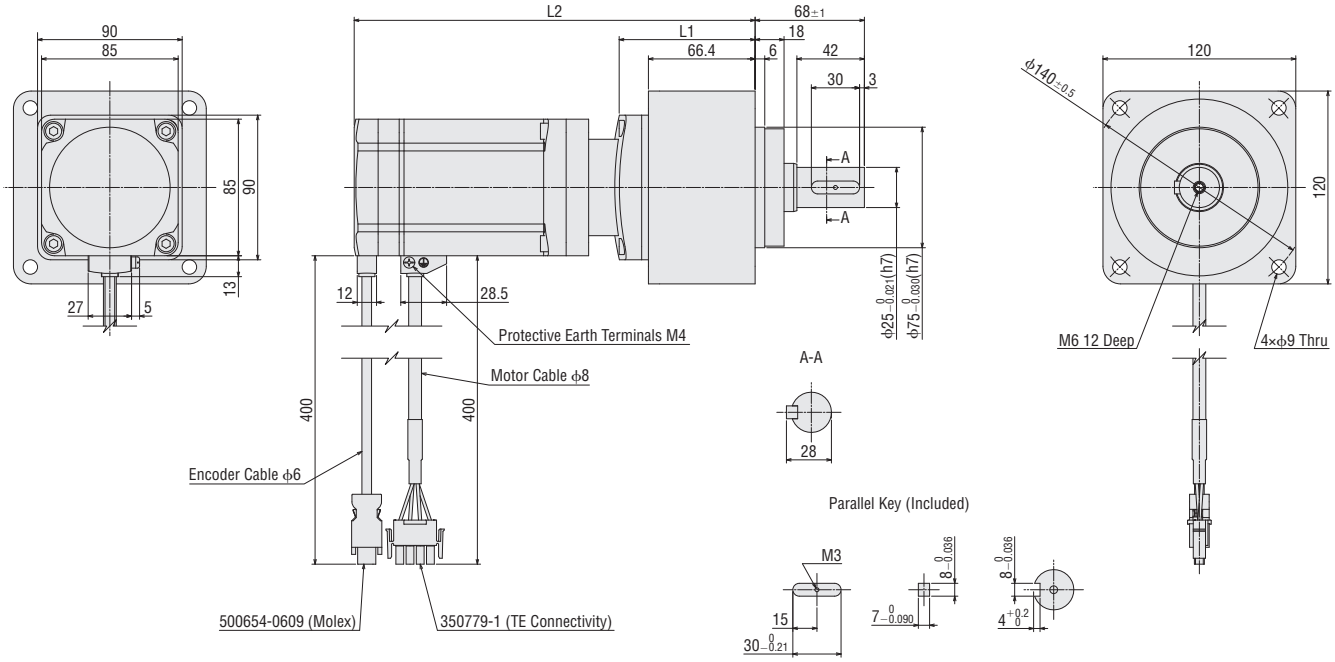

● A number indicating the gear ratio is specified where the box ■ is located in the product name.

◇**PS** Geared Type with Electromagnetic Brake

Frame Size 90 mm 400 W

2D & 3D CAD

Product Name	Gear Ratio	L1	L2	Mass kg	2D CAD
AZXM940MC-PS■	**5**, **10**	61	243.5	4.0	C265
	25	88.3	270.5	4.9	C266

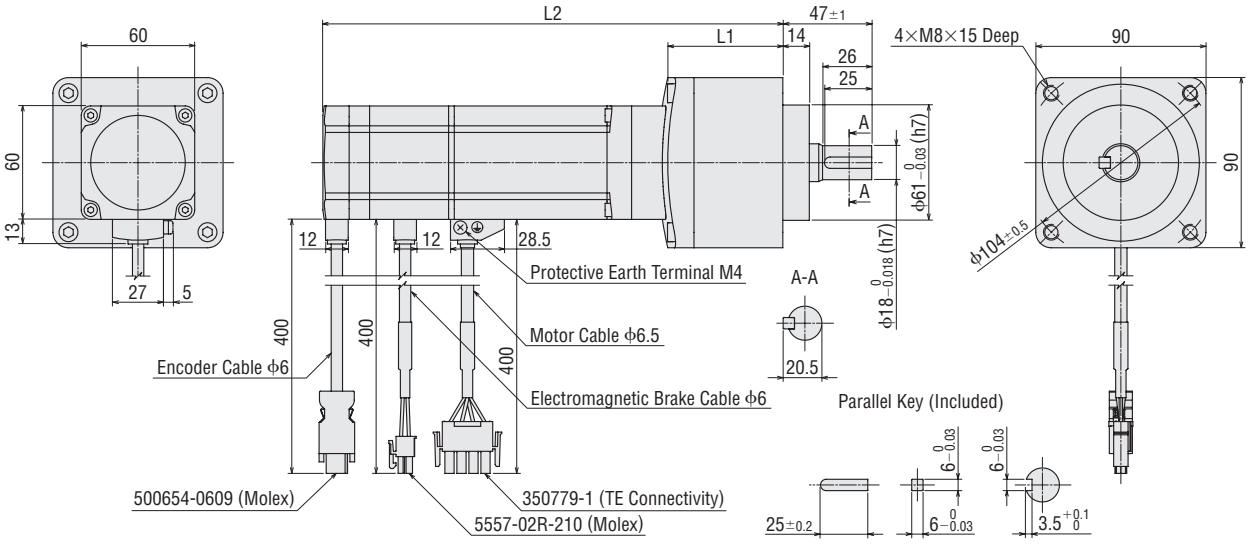

Frame Size 90 mm 600 W

2D & 3D CAD

Product Name	Gear Ratio	L1	L2	Mass kg	2D CAD
AZXM960MC-PS■	**5**	61	268	6.2	C270

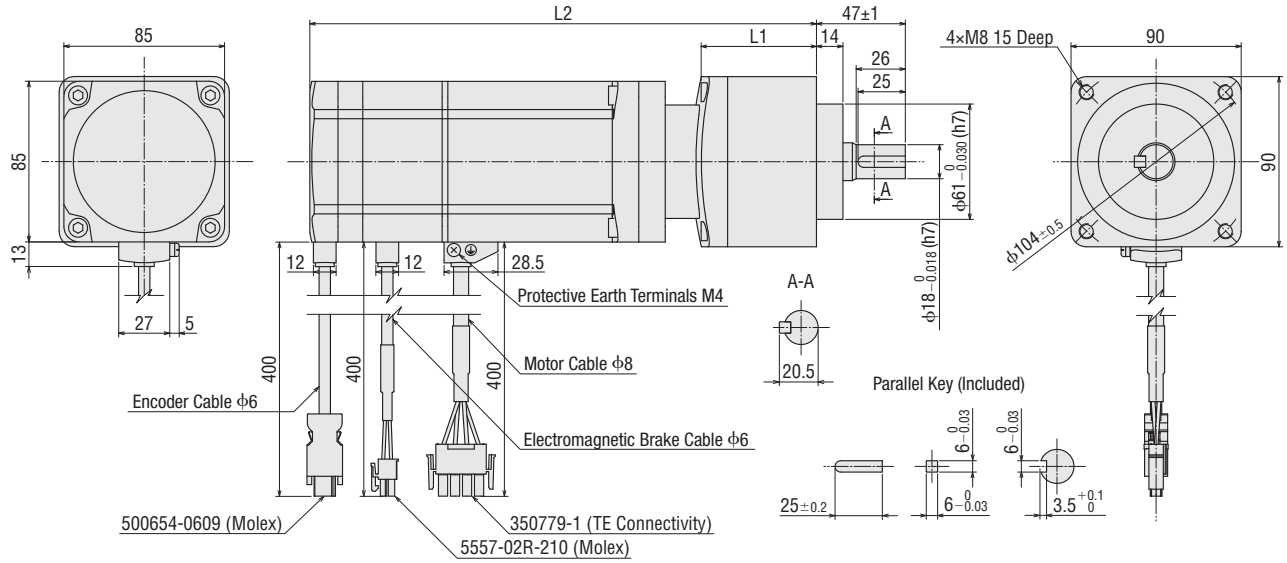

● A number indicating the gear ratio is specified where the box ■ is located in the product name.

Frame Size 120 mm 600 W

2D & 3D CAD

Product Name	Gear Ratio	L1	L2	Mass kg	2D CAD
AZXM1260MC-PS■	**10**	84.6	291.5	8.3	C272
	25	111.9	319	9.1	C273

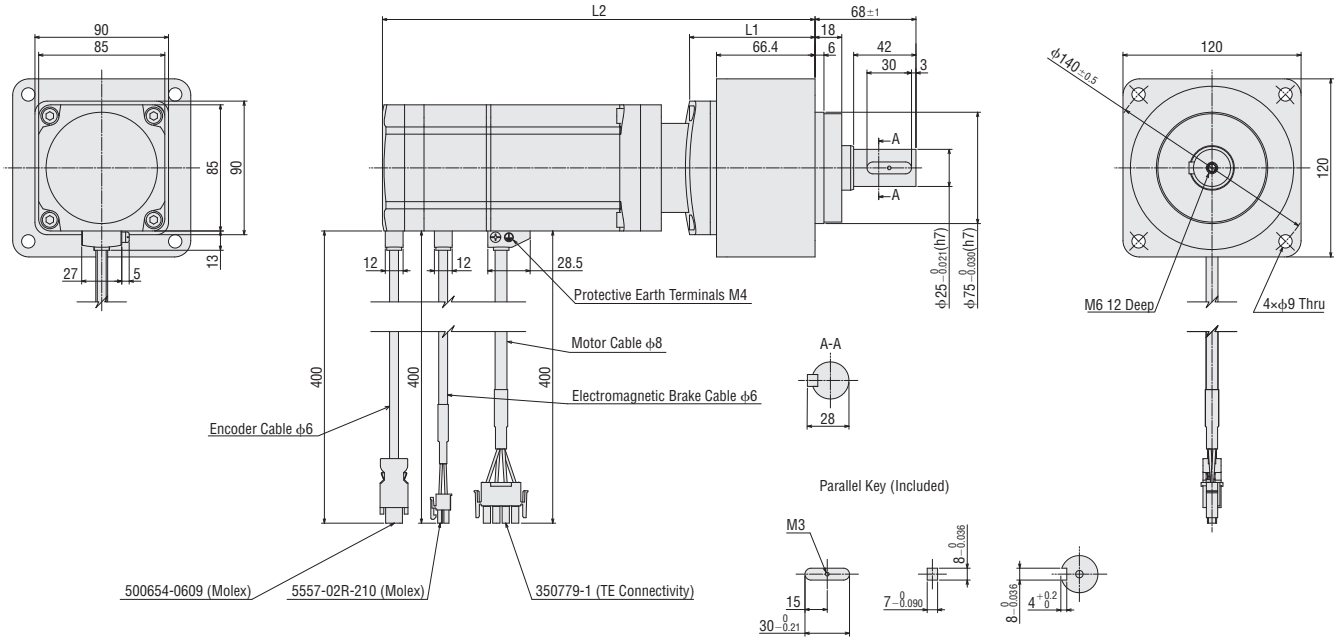

Driver

2D & 3D CAD

Type	Product Name	Mass kg	2D CAD
EtherCAT-Compatible	**AZXD-SED**	1.5	C260
EtherNet/IP-Compatible	**AZXD-SEP**		
PROFINET-Compatible	**AZXD-SPN**		

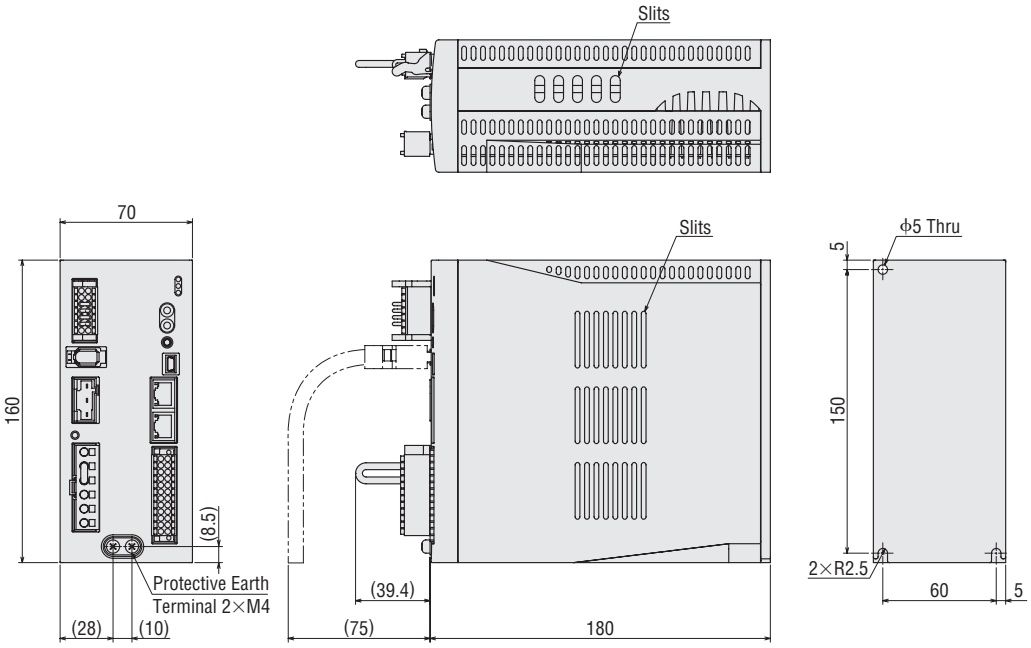

● Included Items

Control Power Supply Input/Electromagnetic Brake Connection/Regeneration Unit Thermal Input/Power Shut Down Signal I/O Connector (CN1)
- Connector: DFMC1,5/7-ST-3,5-LR (Phoenix Contact)

Connector for Main Power/Regeneration Unit (CN4)
- Connector: 1-2271454-6 (TE Connectivity)
- Connector Wiring Lever

I/O Signals Connector (CN7)
- Connector: DFMC1,5/12-ST-3,5 (Phoenix Contact)

● A number indicating the gear ratio is specified where the box ■ is located in the product name.

Cable

Cable System Configuration

Network Compatible Driver

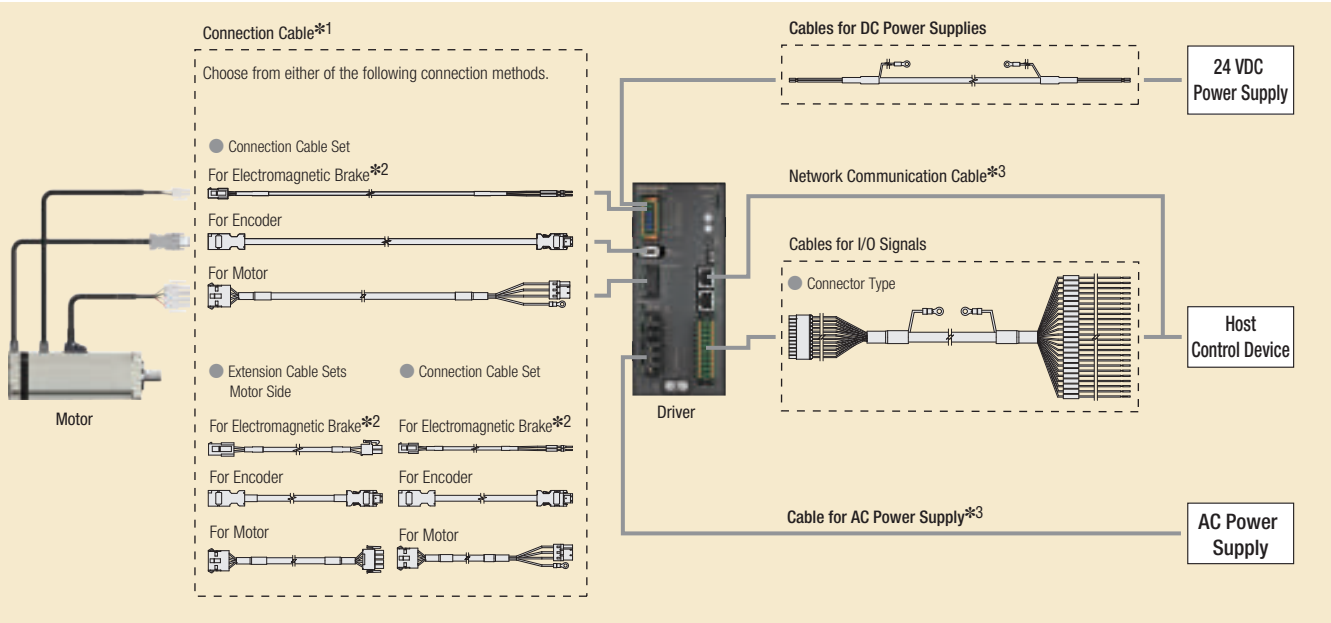

*1 Flexible connection cable sets and flexible extension cable sets with excellent durability are also available.
*2 Required for motors with an electromagnetic brake.
*3 Not supplied.

Note

- Up to 3 cables can be used to connect the motor and driver.
- The maximum extension distance between the motor and driver is 20 m.
- The motor cable and electromagnetic brake cable from the motor cannot be connected directly to the driver. When connecting to a driver, use a connection cable.

Connection Cable

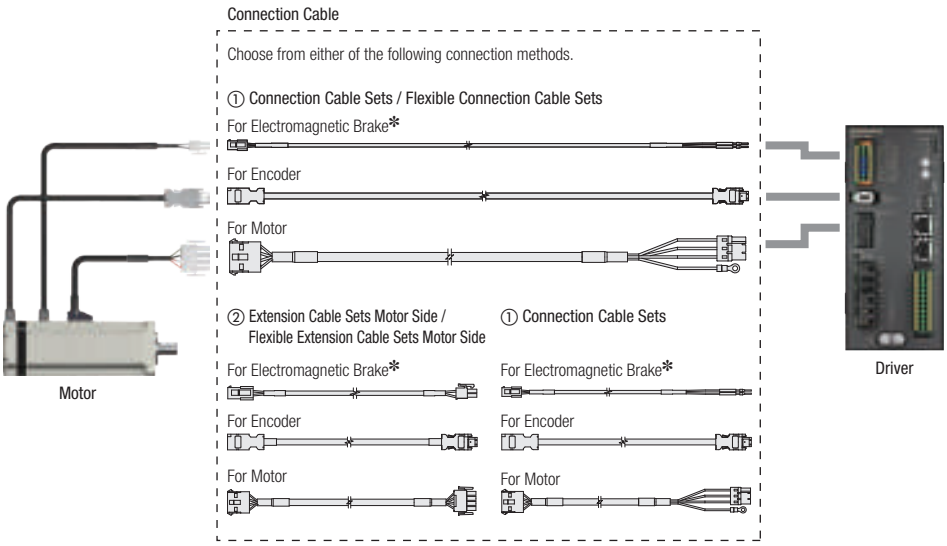

*Required for motors with an electromagnetic brake.

Note

- Up to 3 cables can be used to connect the motor and driver.
- The maximum extension distance between the motor and driver is 20 m.

① Connection Cable Sets / Flexible Connection Cable Sets

This is a connection cable set used to connect the motor and the driver. Use a flexible extension cable set in applications where the cable is bent and flexed repeatedly. The motor cable and electromagnetic brake cable from the motor cannot be connected directly to the driver. When connecting to a driver, use a connection cable.

Product Line

◇Connection Cable Set

· For Motor / Encoder

• For Motor / Encoder

Length L (m)	Product Name
1	**CC010VXF**
2	**CC020VXF**
3	**CC030VXF**
5	**CC050VXF**
7	**CC070VXF**
10	**CC100VXF**
15	**CC150VXF**
20	**CC200VXF**

· For Motor / Encoder / Electromagnetic Brake

• For Motor / Encoder / Electromagnetic Brake

Length L (m)	Product Name
1	**CC010VXFB**
2	**CC020VXFB**
3	**CC030VXFB**
5	**CC050VXFB**
7	**CC070VXFB**
10	**CC100VXFB**
15	**CC150VXFB**
20	**CC200VXFB**

◇Flexible Connection Cable Sets

· For Motor / Encoder

• For Motor / Encoder

Length L (m)	Product Name
1	**CC010VXR**
2	**CC020VXR**
3	**CC030VXR**
5	**CC050VXR**
7	**CC070VXR**
10	**CC100VXR**
15	**CC150VXR**
20	**CC200VXR**

● Note on use of flexible cables ➜ Page 26

· For Motor / Encoder / Electromagnetic Brake

• For Motor / Encoder / Electromagnetic Brake

Length L (m)	Product Name
1	**CC010VXRB**
2	**CC020VXRB**
3	**CC030VXRB**
5	**CC050VXRB**
7	**CC070VXRB**
10	**CC100VXRB**
15	**CC150VXRB**
20	**CC200VXRB**

● Note on use of flexible cables ➜ Page 26

Dimensions (Unit = mm)

◇Cable for Motor

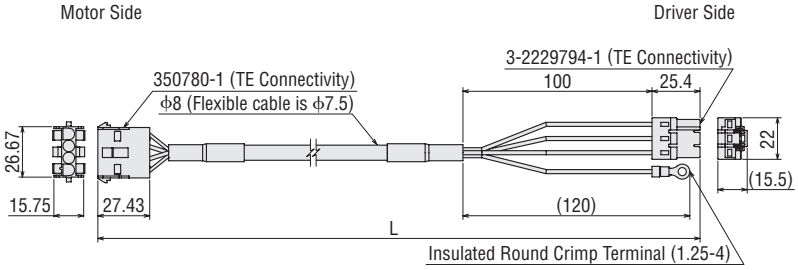

◇Cable for Encoder

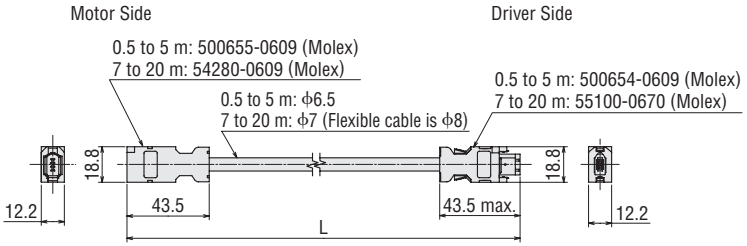

◇Cable for Electromagnetic Brake

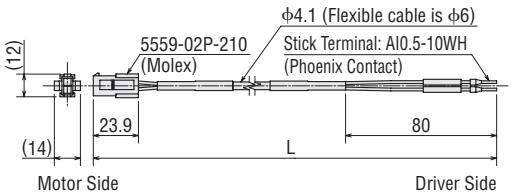

② Extension Cable Set - Motor Side / Flexible Extension Cable Set - Motor Side

This is a cable to extend the connection cable to the motor. When using an extension, the total length of the cable must be less than 20 m. Use the flexible extension cable set in applications where the cable is bent and flexed repeatedly.

Product Line

◇Extension Cable Sets

· For Motor / Encoder

• For Motor / Encoder

Length L (m)	Product Name
1	**CC010VXFT**
2	**CC020VXFT**
3	**CC030VXFT**
5	**CC050VXFT**
7	**CC070VXFT**
10	**CC100VXFT**
15	**CC150VXFT**

· For Motor / Encoder / Electromagnetic Brake

• For Motor / Encoder / Electromagnetic Brake

Length L (m)	Product Name
1	**CC010VXFBT**
2	**CC020VXFBT**
3	**CC030VXFBT**
5	**CC050VXFBT**
7	**CC070VXFBT**
10	**CC100VXFBT**
15	**CC150VXFBT**

◇Flexible Extension Cable Sets

· For Motor / Encoder

• For Motor / Encoder

Length L (m)	Product Name
1	**CC010VXRT**
2	**CC020VXRT**
3	**CC030VXRT**
5	**CC050VXRT**
7	**CC070VXRT**
10	**CC100VXRT**
15	**CC150VXRT**

● Note on use of flexible cables ➜ Page 26

· For Motor / Encoder / Electromagnetic Brake

• For Motor / Encoder / Electromagnetic Brake

Length L (m)	Product Name
1	**CC010VXRBT**
2	**CC020VXRBT**
3	**CC030VXRBT**
5	**CC050VXRBT**
7	**CC070VXRBT**
10	**CC100VXRBT**
15	**CC150VXRBT**

● Note on use of flexible cables ➜ Page 26

Dimensions (Unit = mm)

◇Cable for Motor

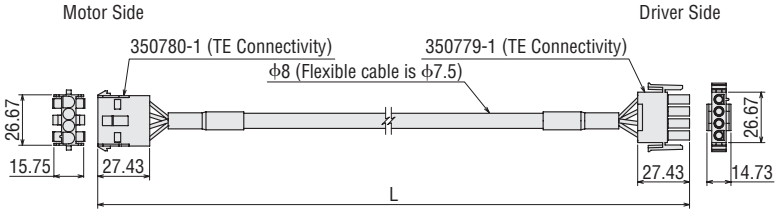

◇Cable for Encoder

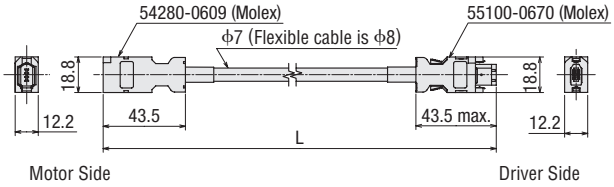

◇Cable for Electromagnetic Brake

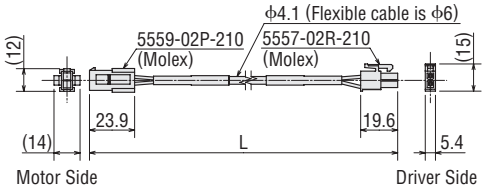

Cable for I/O Signals

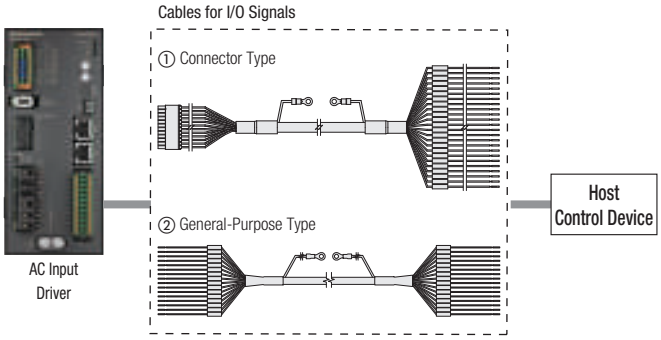

① Connector-Coupled Type

- Multi-core shielded cable
- Unbundled wires on one end
- Easy shield grounding using ground wire with a round terminal

Product Line

Product Name	Length L (m)	Number of Lead Wire Cores	AWG
CC24D005C-1	0.5	24	24
CC24D010C-1	1		
CC24D020C-1	2		

Dimensions (Unit = mm)

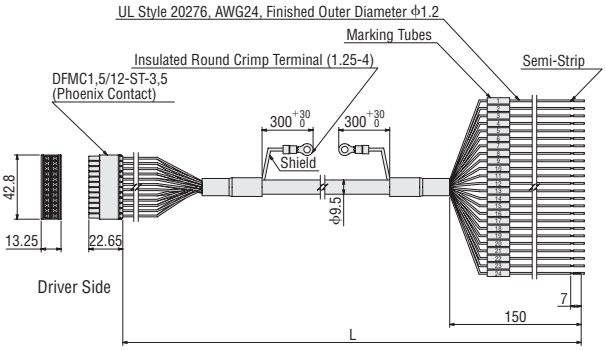

② General-Purpose Type

- Multi-core Shielded Cable
- Unbundled wires on both ends
- Easy shield grounding using ground wire with a round terminal
- The number of lead wire cores can be selected to suit the functions that will be used

Product Line

Product Name	Length L (m)	Number of Lead Wire Cores	Outer Diameter D (mm)	AWG
CC06D005B-1	0.5	6	ϕ5.4	24
CC06D010B-1	1			
CC06D015B-1	1.5			
CC06D020B-1	2			
CC10D005B-1	0.5	10	ϕ6.7	
CC10D010B-1	1			
CC10D015B-1	1.5			
CC10D020B-1	2			
CC12D005B-1	0.5	12	ϕ7.5	
CC12D010B-1	1			
CC12D015B-1	1.5			
CC12D020B-1	2			
CC16D005B-1	0.5	16	ϕ7.5	
CC16D010B-1	1			
CC16D015B-1	1.5			
CC16D020B-1	2			

Dimensions (Unit = mm)

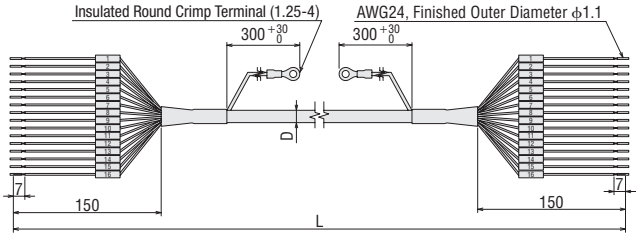

The figure depicts 16 core wires.

Cables for DC Power Supplies

These cables are used to connect the driver and the DC power supply.

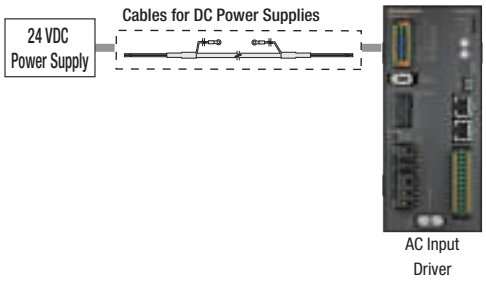

Product Line

Product Name	Length L (m)
CC02D005-3	0.5
CC02D010-3	1
CC02D015-3	1.5
CC02D020-3	2
CC02D050-3	5

Dimensions (Unit = mm)

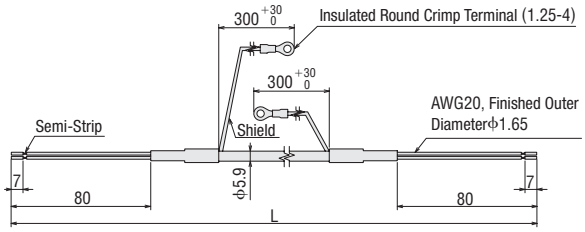

Note on Use of Cables

Note when Connecting the Connectors

When inserting or removing connectors, always hold the connector.
Pulling on the cable may result in connection faults.

◇When Inserting the Connector

Hold the connector body and insert as straight as possible.
If the connector is angled while inserted, it may result in damage to the terminals or connection faults.

◇When Removing the Connector

Disengage the connector's lock and pull straight out.
If the connector is disengaged by pulling the cable, it may result in damage to the connector.

Notes on Routing of Flexible Cables

Do not bend the cable at the connector. This will apply stress to the connector and the terminal, and may result in connection faults or disconnections.

◇Cable Fixing Method

Please fix in 2 locations to prevent movement of the connector.

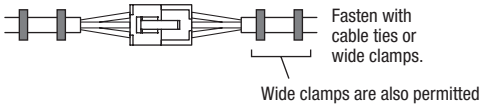

◇Cable Routing Length and Bend Radius

When routing cables, use an appropriate length that prevents pulling when the cable is moved.
The bend radius must be at least 6 times the cable diameter

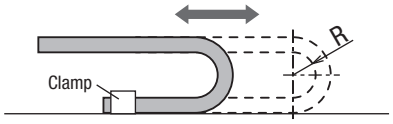

◇Cable Interference

When routing cables inside a cable holder, ensure that the cables do not interfere with each other. This will apply stress to the connector and the terminal, and may result in premature disconnection. Please carefully check the cautions when using cable holders.

◇Twisting of Cables

Route the cables so that they do not become twisted. Premature wire breaking may occur if they are bent while twisted.
After routing the wires, use the markings on the surface of the cable to ensure that the cables are not twisted.

Peripheral Equipment

Regeneration Unit

The regenerative power generated by the motor may exceed the driver's regenerative power absorption capacity.
In such case, a regeneration unit is connected to the driver to dissipate the regenerative power.

<Conditions in Which a Regeneration Unit is Likely Required>

-Vertical drive
-Acceleration or deceleration with an inertial load installed

Prices

Product Name
RGB200

Specifications

Item	Description
Continuous Regenerative Power	200 W
Resistance Value	50 Ω
Thermal Protector Operating Temperature	Operation: 175±5°C Return: 115±15°C (Normally closed)
Thermal Protector Electrical Rating	227 VAC 8 A 115 VAC 22 A

●Install the regeneration unit in a place that has the same heat radiation capability as the heat sink (material: aluminum, 350×350 mm, 3 mm thick).

Motor Mounting Brackets

Mounting brackets convenient for installing motors are available.
Pilot holes on the motor are used to allow for snug mounting.
Motor installation screws are included.

PLBW5PS

Product Line

●For **PS** Geared Type

Product Name	Motor Frame Size	Applicable Product
PLBW5PS	90 mm	**AZXM9**

Connector Cover

<Application Example>

This is a resin cover for protecting and securing the connected connector part of the cable.

・Protection level equivalent to IP20
・It can be installed after connecting the motors and drivers.
・It is a structure to secure cables and protect lead wires.
・It can be attached to the equipment using two mounting holes (ϕ4.5).

Prices

Material: Polyamide

Product Name
MAC-D*
MAC-D02

*Excluding encoder cable and motor cable

Orientalmotor

Oriental Motor Asia Pacific Pte. Ltd.

2 Kaki Bukit Ave 1 #05-06
Singapore 417938
TEL: +65-6745-7344 FAX: +65-6745-9405
https://www.orientalmotor.com.sg/sg

For Vietnam
ZALO: +65-9187-1994
https://www.orientalmotor-vie.com.vn/vn

Oriental Motor (Thailand) Co., Ltd.

Headquarters & Bangkok Office
63 Athenee Tower, 6th Floor Unit 603, Wireless Rd,
Lumpini, Pathumwan, Bangkok 10330, Thailand
TEL: +66-2-251-1871 FAX: +66-2-251-1872
https://www.orientalmotor.co.th/th

Oriental Motor (Malaysia) Sdn. Bhd.

Headquarters & Kuala Lumpur office
A-13-1, North Point Offices, Mid Valley City,
No.1 Medan Syed Putra Utara 59200
Kuala Lumpur, Malaysia
TEL: +60-3-22875778

Penang office
3-1-3A, Queens Residence Q2, Persiaran
Bayan Indah, 11900, Bayan Lepas, Penang
TEL: +60-4-6423788 FAX: +60-4-6425788
https://www.orientalmotor.com.my/my

Oriental Motor (India) Pvt. Ltd.

1st Floor, No.11, Ashley Park, M.G Road,
Bangalore, 560001, India
TEL: +91-80-41125586 FAX: +91-80-41125588
https://www.orientalmotor.co.in/in

For more information please contact: